DocuSign Envelope ID: B51E6D10-1F79-497C-9E49-0FE7172D207D

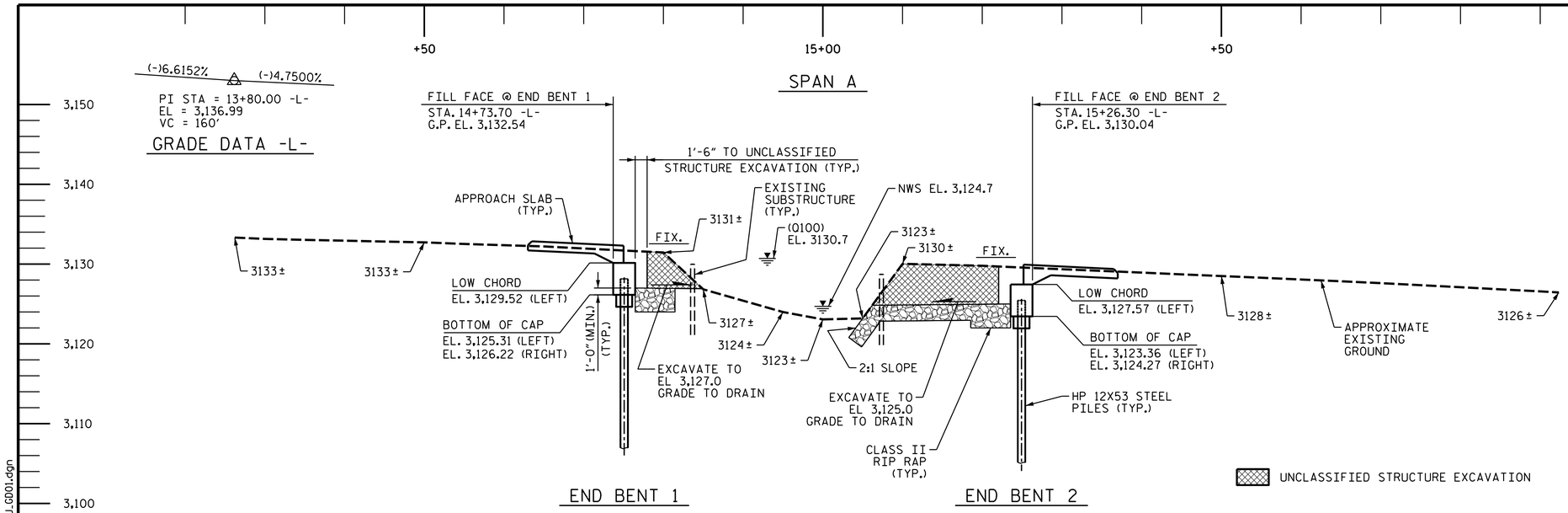

SECTION ALONG -L-

SECTION TAKEN AT RIGHT ANGLES TO END BENTS

HYDRAULIC DATA

DESIGN DISCHARGE	750 CFS
FREQUENCY OF DESIGN FLOOD	25 YRS. ✱
DESIGN HIGH WATER ELEVATION	3,129.7
DRAINAGE AREA	2.5 SQ.MI.
BASE DISCHARGE (Q100)	1100 CFS
BASE HIGH WATER ELEVATION	3,130.7

✱ MAINTAINS EXISTING LEVEL OF SERVICE

OVERTOPPING FLOOD DATA

OVERTOPPING FLOOD DISCHARGE	1100 CFS
FREQUENCY OF OVERTOPPING FLOOD	±100 YRS.
OVERTOPPING FLOOD ELEVATION	3,128.0

@ STA. 15+77.00 -L- @ DRIVEWAY

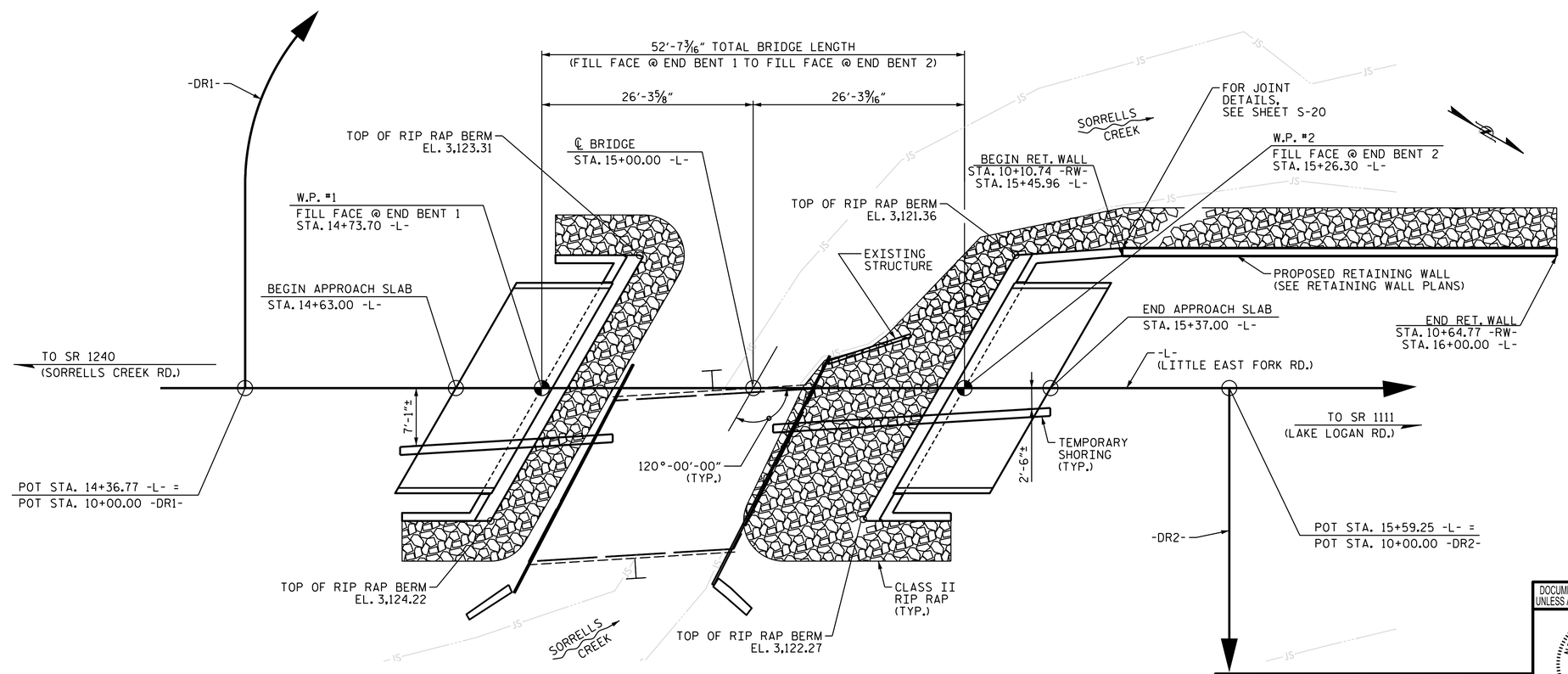

PLAN

FOR CLARITY, PILES NOT SHOWN IN PLAN VIEW

I HEREBY CERTIFY THESE PLANS
ARE THE AS-BUILT PLANS

PROJECT NO. 17BP.14.R.177

HAYWOOD COUNTY

STATION: 15+00.00 -L-

SHEET 1 OF 3 REPLACES BRIDGE NO. 237

STATE OF NORTH CAROLINA
DEPARTMENT OF TRANSPORTATION
RALEIGH

SUPERSTRUCTURE
GENERAL DRAWING
FOR BRIDGE ON SR 1129 (LITTLE EAST FORK RD.) OVER SORRELLS CREEK BETWEEN SR 1111 & SR 1240

DOCUMENT NOT CONSIDERED FINAL UNLESS ALL SIGNATURES COMPLETED

NORTH CAROLINA PROFESSIONAL SEAL 19299 ENGINEER THOMAS M. HARRIS

DocuSigned by: Thomas Harris 11/23/2021
F9EBC057AC1A4EE...

WSP USA Inc.
434 FAYETTEVILLE STREET
SUITE 1500
RALEIGH, NC 27601
TEL: 1.919.836.4040
LICENSE NO. F-0165

REVISIONS							SHEET NO.
NO.	BY:	DATE:	NO.	BY:	DATE:		S-1
1			3				TOTAL SHEETS
2			4				26

DESIGNED BY:	J. WHEATLEY	DATE : NOV 2021
DRAWN BY:	J. WHEATLEY	DATE : NOV 2021
CHECKED BY:	T. KIRSCHBAUM	DATE : NOV 2021
DESIGN ENGINEER OF RECORD:	T. HARRIS	DATE : NOV 2021

11/3/2021
J:\188360C - 2015 W Divisions Planning & Design On-Call\I188360C Group 3 Bridges\17BP.R177.43023T\Structures\Drafting\DGNs\401_001_17BP.14.R.177_SMU_GD01.dgn